**Deshmukh Honda**

HONDA

# Dio WANNA HAVE FUN?

**The above TFT image is of Dio 125.*

INTRODUCING

# Dio 110 / Dio 125

## EXPERIENCE FUN LIKE NEVER BEFORE.

*Honda Dio 110 and Dio 125 are the perfect rides to make the most of your day and have fun all the way. They're powerful, and power-packed with world-class features. They're comfortable and commanding. They're style personified. But most of all, they promise a smooth, efficient, and fun experience, every single time.*

# Dio WANNA HAVE FUN WITH NEW TECHNOLOGY?

## TFT METER 10.67 cm

Dio 110 | Dio 125

*Advanced and interactive, the TFT meter provides real-time and average fuel efficiency, and range (distance to empty), keeping you always informed.*

- REAL-TIME MILEAGE
- RANGE (DISTANCE TO EMPTY)
- AVERAGE MILEAGE

*Image reference is for Dio 125.

Dio 125

# Honda RoadSync

***Stay connected effortlessly with the Honda RoadSync app.***
***Seamlessly link your smartphone to your Dio 125 via Bluetooth.***
***And enjoy a smooth, hassle-free ride while accessing essential features right at your fingertips.***

*Manage messages via voice commands*

*Use turn-by-turn navigation to reach anywhere*

*Get real-time weather updates for any location*

*Manage and make calls directly from your Dio 125*

*Enjoy easy music control*

Dio 125

# Smart Key

## With H-Smart Technology

***Unlock a smarter ride with our H-Smart technology and experience the ultimate convenience and security with the Honda Smart Key.***

### SmartFIND

*Searching for your ride in a crowded parking or low-light conditions can be frustrating and the answer back feature solves it.*

### SmartSAFE

*Your Dio 125 stays secure, even when you're not around.*

### SmartSTART

*Start your Dio 125 without even taking the key out of your pocket.*

### SmartUNLOCK

*No need to fumble for your key- Honda Smart Key makes unlocking effortless.*

**Smart Key is available in Dio 125 H-Smart variant only.*

Dio 110

# IDLING STOP SYSTEM

*Dio 110's Idling Stop System automatically shuts down the engine during brief stops, reducing unnecessary fuel consumption, and easing rider fatigue.*

Dio 125

# ADVANCED IDLING STOP SYSTEM

*The Advanced Idling Stop System on Dio 125 takes fuel efficiency and convenience to the next level as it automatically cuts-off the engine below a certain speed and seamlessly restarts the engine when the rider pulls-up the throttle again.*

Dio 110

Dio 125

## SIDE STAND ENGINE CUT-OFF*

*It automatically shuts off the engine for added safety when the side stand is engaged.*

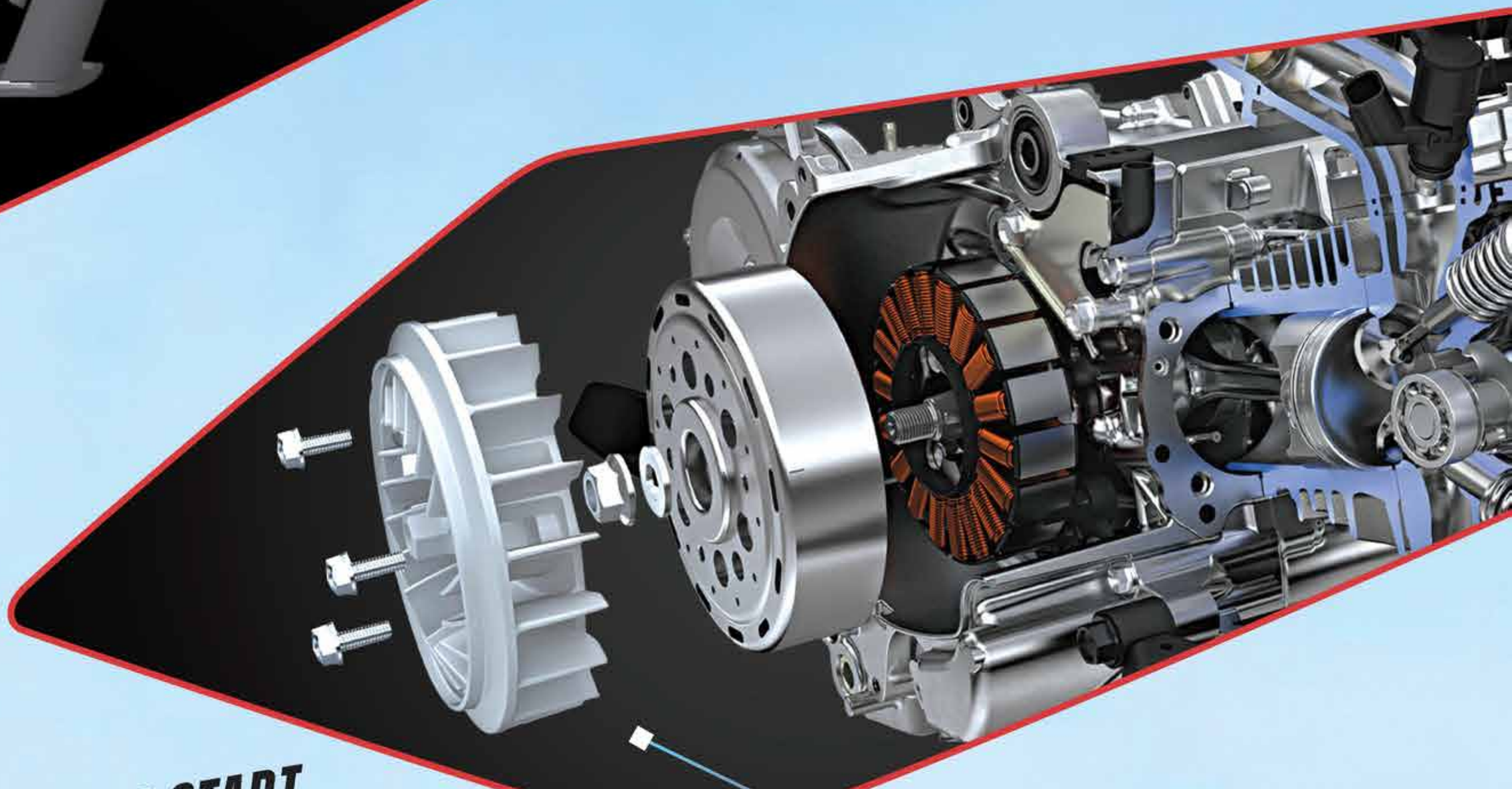

## SILENT START WITH ACG

*The ACG Starter provides a smooth, silent start every time, and reduces engine maintenance.*

## PGM-FI FUEL INJECTION

*The PGM-FI system optimizes fuel and air for efficient combustion, ensuring steady power and better mileage.*

*Side stand is a part of genuine standard accessories.

# DO WANNA HAVE FUN WITH COMFORT?

Dio 110

Dio 125

## USB TYPE-C CHARGING

*With the built-in USB Type-C charger, never ever worry about your phone's battery running out.*

## DOUBLE-LID EXTERNAL FUEL FILL

*Now no need to get up to get your Dio refilled with a double-lid external fuel fill.*

Dio 110

Dio 125

## PASSING SWITCH

*Pass like a boss with an easy-to-use passing switch for high beam, low beam, and passing with a flick.*

## RETRACTABLE PILLION FOOT STEP

*Convenient and easy to use, so that the comfort of those sitting behind is always at the forefront.*

## FRONT POCKET



*A pocket that's amazingly spacious. So, whether it's your sipper or sunglasses, keep all your essentials close.*

Dio 125

## MULTI-FUNCTION UNIT*

*Safety meets style, style meets convenience. An iconic sleek, blue back-lit knob that elevates your ride and ride quality.*

## TELESCOPIC SUSPENSION

*Say goodbye to bumpy rides! Our telescopic suspension features dual hydraulic shock absorbers with internal coil springs, designed for minimum vibrations, maximum comfort.*

## 12-INCH FRONT WHEEL

*Our 12-inch wheels are designed to tackle tough terrains with ease, giving you effortless clearances and enhanced confidence.*

*Available only in H-Smart variant.

Dio WANNA HAVE FUN WITH

# STYLE?

Dio 110

Dio 125

## SPLIT GRABRAIL

*A bold, sleek grabrail that grabs attention from the first glance onwards.*

## SPORTY MUFFLER

*A stylishly cool muffler protector on Dio 110 to up the style.*

*A thunderous sound for a thunderous entry. Dio 125's dual-tip muffler announces your arrival before you even arrive.*

## ALLOY WHEELS

*These alloy wheels combine stylishness with unmatched comfort.*

Dio 110

Dio 125

## SPORTY DISC BRAKE

Only for Dio 125

*High-performance disc brakes fitted in sleek alloy wheels, perfect for those who like to stay stylishly in command.*

## POSITION LAMP

*The distinctive LED lamp enhances the bold look while adding a touch of flair to your style.*

## FIERCE LED HEADLAMP

*For trendsetters who own the night, the sleek LED lights provide a bright, clear view of the road ahead.*

# DIO WANNA HAVE FUN WITH COLOURS?

## DIO 110

IMPERIAL RED METALLIC

MAT MARVEL BLUE

MAT AXIS GRAY METALLIC

PEARL IGNEOUS BLACK

PEARL IGNEOUS BLACK + PEARL DEEP GROUND GRAY

## DIO 125

MAT MARVEL BLUE METALLIC

PEARL DEEP GROUND GRAY (EMBLEM)

PEARL SPORTS YELLOW

PEARL DEEP GROUND GRAY (STRIPE)

IMERIAL RED

PEARL IGNEOUS BLACK

## AVAILABLE IN 2 DIFFERENT VARIANTS

Dio 110

| Features | STD | DLX |
|---|---|---|
| TFT Meter | ✗ | ✓ |
| Eco Indicator | ✗ | ✓ |
| Real-Time Fuel Efficiency | ✗ | ✓ |
| Average Fuel Efficiency | ✗ | ✓ |
| Range (Distance To Empty) | ✗ | ✓ |
| Alloy Wheels | ✗ | ✓ |
| Periodic Maintenance Indicator | ✗ | ✓ |
| Automatically Adjustable Meter Light & Dark Theme Modes | ✗ | ✓ |
| Universal USB-C Type Charging | OP | ✓ |
| Idling Stop System With Turn Off Switch | ✓ | ✓ |
| Double-Lid External Fuel Fill | ✓ | ✓ |
| Glove Box | ✓ | ✓ |
| ACG Silent Start | ✓ | ✓ |
| CBS With Equalizer | ✓ | ✓ |

Dio 125

| Features | DLX | H-SMART |
|---|---|---|
| Multi-Function SMART Switch Unit | ✗ | ✓ |
| Smart Key | ✗ | ✓ |
| Smart Find | ✗ | ✓ |
| Smart Unlock | ✗ | ✓ |
| Smart Safe | ✗ | ✓ |
| Smart Start | ✗ | ✓ |
| Bluetooth Connectivity | ✗ | ✓ |
| Honda RoadSync App | ✗ | ✓ |
| Turn By Turn Navigation With Voice Assist | ✗ | ✓ |
| Calling | ✗ | ✓ |
| Message - Answer Back | ✗ | ✓ |
| Weather Forecast | ✗ | ✓ |
| Music Control Through TFT | ✗ | ✓ |
| TFT Meter | ✓ | ✓ |
| Eco Indicator | ✓ | ✓ |
| Real-Time Fuel Efficiency | ✓ | ✓ |
| Average Fuel Efficiency | ✓ | ✓ |
| Range (Distance To Empty) | ✓ | ✓ |
| Alloy Wheels | ✓ | ✓ |
| Universal USB-C Type Charging | ✓ | ✓ |
| Adv. Idling Stop System With Turn Off Switch | ✓ | ✓ |
| Double-Lid External Fuel Fill | ✓ | ✓ |
| Glove Box | ✓ | ✓ |
| ACG Silent Start | ✓ | ✓ |
| CBS With Equalizer | ✓ | ✓ |
| Disc Brakes | ✓ | ✓ |
| Periodic Maintenance Indicator | ✓ | ✓ |
| Automatically Adjustable Meter Light & Dark Theme Modes | ✓ | ✓ |

# TECHNICAL SPECIFICATION+

| Body Dimensions | 110 cc | 125 cc |
|---|---|---|
| Length | 1808 mm | 1830 mm |
| Width | 677 mm | 707 mm |
| Height | 1151 mm | 1172 mm |
| Wheel Base | 1260 mm | 1260 mm |
| Ground Clearance | 160 mm | 171 mm |
| Seat Length | 650 mm | 708 mm |
| Kerb Weight | Std. & Dlx: 106 kg | 104 kg (Smart), 105 kg (Dlx) |
| Fuel Tank Capacity | 5.3 L | 5.3 L |

| Engine | | |
|---|---|---|
| Type | 4 Stroke, SI Engine | 4 Stroke, SI Engine |
| Displacement | 109.51 cc | 123.92 cc |
| Max Net Power | 5.85 kW @ 8000 rpm | 6.11 kW @ 6500 rpm |
| Max Net Torque | 9.03 N-m @ 5500 rpm | 10.5 N-m @ 5000 rpm |
| Bore | 47.0 mm | 50.0 mm |
| Stroke | 63.121 mm | 63.113 mm |
| Fuel System | PGM - FI | PGM - FI |
| Compression Ratio | 10.0:1 | 10.0:1 |
| Air Filter Type | Viscous Paper Filter | Viscous Paper Filter |
| Starting Method | Kick / Self | Self |

| Transmission | | |
|---|---|---|
| Clutch Type | Automatic Centrifugal Clutch Dry Type | Automatic Centrifugal Clutch Dry Type |

| Tyres & Brakes | | |
|---|---|---|
| Tyre Size (Front) | 90/90-12 54J | 90/90-12 54J |
| Tyre Size (Rear) | 90/100-10 53J | 90/100-10 53J |
| Tyre Type (Front) | Tubeless | Tubeless |
| Tyre Type (Rear) | Tubeless | Tubeless |
| Brake Type & Size (Front) | Drum - 130 mm | Disc - 190 mm |
| Brake Type & Size (Rear) | Drum - 130 mm | Drum - 130 mm |

| Frames & Suspensions | | |
|---|---|---|
| Frame Type | Underbone | Underbone |
| Front | Telescopic | Telescopic |
| Rear | Unit Swing | 3-Step Adjustable Spring Loaded Hydraulic |

| Electricals | | |
|---|---|---|
| System Voltage | 12V | 12V |
| Battery | 5.0 Ah | 5.0 Ah |
| Head Lamp | LED | LED |

+The technical specifications and design of the vehicle may vary according to the requirements and conditions without any notice • Range (distance to empty), real time and average mileage readings may vary as per the variant and riding conditions • Dio 110 and Dio 125 meets Bharat stage VI OBD-2B norms • Product shown in the picture may vary from the actual product available in the market • Accessories shown in the picture are not part of the standard equipment • All features and colours may not be part of all variants • +Conditions apply.

**Honda Motorcycle and Scooter India Pvt. Ltd.**
**Registered Office:** Plot No. 1, Sector-03, IMT Manesar, Distt. Gurugram- 122050 (Haryana)
**Tel:** +91(0)124-2290011, +91(0)6712800, **Fax:** +91(0)124-6712999
**Visit us at:** www.honda2wheelersindia.com **Customer Care:** customercare@honda.hmsi.in
Follow us at : honda2wheelers.in honda2wheelerin honda2wheelersin honda2wheelerin

Dealer Stamp

Deshmukh Honda
Main Road Mondha
Ambajogai
Tel: 7030829999
Mob: 7030839999